The Single Source Supplier

Lomart

A Division of Hoffinger Industries, Inc.

Spectra 3

Sand Filter with 6 Position Valve - Threaded Ports

Model — 1-1702-089 17" Sand Filter

Model — 1-2091-089 20" Sand Filter

Model — 1-2401-089 24" Sand Filter

Owner's Guide

365-1945

⚠WARNING

"READ ALL INSTRUCTIONS." Failure to follow these important safety instructions and other basic safety precautions may result in serious personal injury.

IMPORTANT SAFETY INSTRUCTIONS

Before you begin installing your filter, refer to your pump owners guide for very important installation and electrical information related to your filter.

ELECTRICAL/BUILDING PERMIT

Local building codes may require obtaining an electrical or building permit and may have regulations on set backs and barriers that must be followed.

ELECTRICAL

We recommend you have a qualified electrical contractor install the electrical power supply as specified in your pump instructions.

INSTALLED LOCATION

Position filter, pump and any other related components a minimum of 5 feet from pool to prevent their being used as a means to climb into the pool by young children. **DO NOT** store toys, chairs, tables, containers or other objects within 5 feet of the pool for the same reason.

WARNING

SEVERE ELECTRICAL SHOCK could result if you install your filter and pump on a deck or above pool water level. They could fall into the water, causing severe shock or electrocution. **DO NOT** install on a deck or other surface at, above or slightly below the top rail of the pool.

PROPERLY SUPPORTED

Filter, pump and any other related components should be properly supported to prevent damage from misalignment, settlement, vibration and mounted so as to minimize the potential for the accumulation of debris and moisture.

ACCESSIBILITY

The circulation system components should be installed to allow accessibility for inspection, repair or replacement. **DO NOT** alter the pump electrical cord in any way or change the plug end to any style. **DO NOT** use an extension cord(s). Severe electrical shock may occur.

PREVENT SEVERE SHOCK

To prevent the risk of severe electrical shock, plug your pump cord end into a grounding type receptacle protected by a ground fault circuit interrupter (GFCI). Contact a qualified electrician if you cannot verify that the receptacle is protected by a GFCI.

DO NOT allow children to operate or play around this product unless they are closely supervised by adults at all times.

Replace damaged cord immediately to reduce the risk of electrical shock.

DO NOT BURY CORD

An unexposed cord may accidentally become damaged or severed by a sharp object or shovel resulting in severe electrical shock. Position cord to prevent accidental damage from lawn mowers, hedge trimmers or other equipment.

BARE FEET/WET GROUND

This is a dangerous combination around electrical equipment. Always be sure the ground under your feet and body is dry before you touch electrical equipment. Failure to heed this warning may cause severe personal injury or electrocution due to severe electrical shock.

WARNING

Avoid direct water spraying with a garden hose around electrical outlets, pump or any other electrical devices. Severe electrical shock or electrocution may occur.

SERVICING YOUR PUMP

Always unplug your pump from the receptacle before servicing, adjusting or repairing.

Did you read the **IMPORTANT SAFETY INSTRUCTIONS**? If not, **READ THEM NOW**. They contain very important safety information related to the installation of your filter. Familiarize yourself with the installation sequences by reading these instructions first. AVOID SHORT-CUTS that may result in reworking the installation.

BEFORE YOU BEGIN

The pool must be properly erected per your pool assembly and installation instructions before installing the filter. Install the surface skimmer and return fitting.

Before completing the filling of the pool to the water level indicator marks on the skimmer face plate, the filter and pump should be installed with all connections secured tightly.

TOOLS REQUIRED

- 3/8" nut driver
- Flat head screwdriver
- Flat shovel
- Carpenter Level
- Tape Measure
- 5/16" Nut Driver (optional)

MATERIALS REQUIRED

- Nine 12" x 12" patio blocks
- Waste hose - 1-1/2" inside diameter
- 1-1/2" hose clamp
- Silicone lubricant (available at pool dealer)
- Ordinary plastic bag
- #20 grade filter sand

Model 17" - 150 lbs.
Model 20" - 225 lbs.
Model 24" - 300 lbs.

INSTALLATION

INSTALLATION LOCATION

Install your filter and pump and any other related components at least 5 feet from the pool to prevent their being used as a means of access to the pool by young children. **Patio blocks provide firm support and keep standing water and weeds away from electrical parts. DO NOT** install your filter and pump base directly on the ground surface. Settling and stressing of circulation lines may occur during wet seasons. Position patio blocks as illustrated, use a shovel and carpenter's level to level

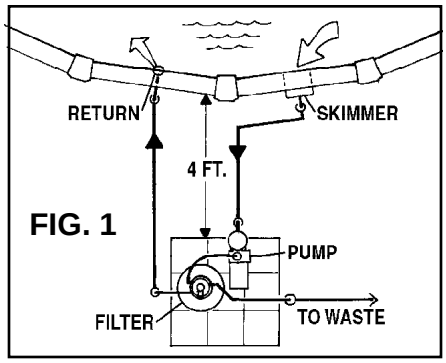

ground before placing the blocks.

POSITIONING FILTER/PUMP

Position the filter and pump as shown in Fig. 1. Make sure filter is positioned in base correctly, once sand is installed it will be difficult to move.

INSTALL FILTER SAND

Your filter is designed to provide peak performance using #20 grade filter (.4/.5 mm) sand. The sand should be uniform in size and appear as crushed sand with sharp edges. Rounded river bed sand will not filter properly. Consult your local pool store.

REMOVE VALVE

Remove valve from tank by pulling up and twisting back and forth.

COVER RISER TUBE

Slip a plastic bag over the riser tube and secure with rubber band.

INSTALL SAND

Gently pour filter sand into tank and level surface with palm of hand. Remove any sand from plastic bag and tank flange sealing surface. Remove rubber band and plastic bag.

REINSTALL COVER

Position large o-ring gasket on tank flange sealing surface and place valve on tank top, aligning o-ring into groove.

Install tank clamp, sandwiching valve and tank flanges. Tighten clamp screws securely.

INSTALL HOSES

See Fig. 1 and Exploded Parts Illustration

IMPORTANT: Incorrect hose hookup could cause damage to your filter system. Follow the instructions below carefully.

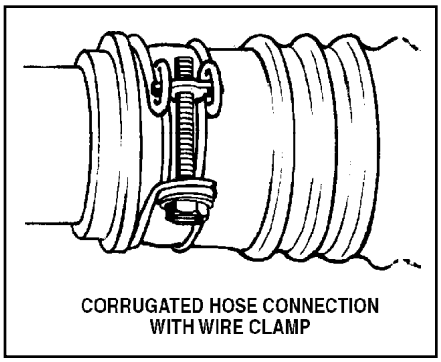

Suction and return lines should be partially buried to prevent accidental tripping that could cause personal injury or damage to the filter system. Be sure the hoses are routed so that water flow through them is not restricted.

Starting at least 12" from the pool wall, make two 3-4" deep trenches, one from the pool skimmer to the front of the pump and the other from the pool return fitting to the filter/ valve return port.

The two 8 ft. long hoses (Item 13 Model 17" Item 21 Model 20", 24"), are interchangeable and used for the suction and return lines. Slip a hose clamp over the ends of each hose prior to installing. Connect one long hose (suction line) between the pool skimmer and front port of the pump. Connect the other long hose (return line) between the pool return fitting and the filter/valve port marked "RETURN". Connect the short hose (Item 15 Model 17", Item 23 Model 20", 24") between the pump discharge port (located at top of pump) and the filter/valve port marked "PUMP". Tighten clamps firmly using a flathead screwdriver or 5/16" nutdriver. Cover the trenches with a firm board when finished.

NOTE: Do not completely bury the hoses with dirt.

WASTE LINE HOOKUP

The discharge waste water will contain pool water treatment chemicals that may harm certain plants and vegetation. Therefore, position the discharge end of the waste line in a safe, out-of-sight area capable of accepting 150 to 200 gallons of waste water. Install a 1-1/2" inside diameter waste discharge hose (not supplied) on the **waste** port near where the sight glass is located on the valve. Slip a 1-1/2" hose clamp (not supplied) over one end of the hose. Then, push hose onto the port fully and tighten clamp firmly.

ELECTRICAL OUTLET

Refer to your pump owners guide for detailed information pertaining to the requirements and regulations for safe electrical installation of the power supply, receptacle outlet, switching and ground fault interrupter.

FINISH FILLING POOL

Finish filling your pool, referring to skimmer installation and pool assembly instructions for proper water level.

VALVE OPERATION

Your new filter has six positions of operation, which are explained below. To change positions of the valve, make sure the pump is **OFF**. Press down on the valve handle enough to free the locking tab. Rotate the handle so the tab **LOCKS** in the desired position.

FILTER: Normal pool filtering position. May also be used when vacuuming the pool.

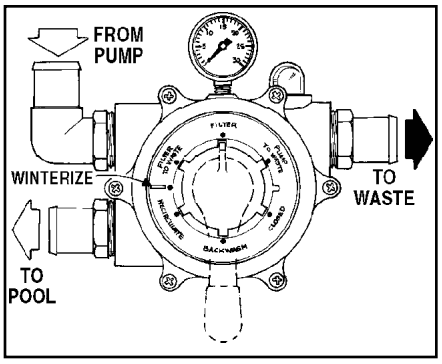

BACKWASH: Backwashing reverses the flow of water through the filter to flush out the dirt and debris, and waste water is discharged to waste from the valve body port with sight glass.

FILTER TO WASTE: Place the valve in the “Filter to waste” position after backwashing your filter. (Normally, for only 10 seconds.)

PUMP TO WASTE: This position allows you to vacuum heavy debris or larger amounts of settled contaminants from the pool floor directly to waste.

RECIRCULATE POSITION: This position allows you to increase the water flow rate to circulate chemicals throughout the pool more quickly. Pool water passes through the valve on top of the filter bypassing internal filter components and travels back to the pool at a rapid rate.

WINTERIZE POSITION: This position allows you to drain trapped water from the filter valve and relieve compression on the rotor valve gasket during winter storage.

CLOSED POSITION: When servicing the filter, place the valve in the “Closed” position to stop backflow of water from pump. Stuff rag in return fitting.

INITIAL START UP

Before you begin filtering your pool, the filter sand must be backwashed thoroughly to remove the extra fine sand grains normally found in new filter sand.

1. Loosen the pump strainer pot lid to allow air to escape. Tighten lid when water begins to flow between strainer pot lid and strainer body. Do not over tighten.
2. Plug in your pump to the GFCI protected receptacle. Refer to WARNINGS.
3. Push down on the valve handle and rotate to the **BACKWASH** position. Make sure valve handle indexes into the alignment slots on valve.
4. Start pump. During this initial start-up allow 4-5 minutes to flush out the super-fine sand grains to prevent them plugging the underdrain slots. Because pool water is lost during this operation (150 to 200 gallons) keep a close check on pool water level. Never let water level get so low that no water flows to pump. Refill pool as required.
5. Push down on the valve handle and rotate to the **FILTER** position and start pump. Note the pressure reading on your pressure gauge for future reference of when to backwash.
6. Check all fittings and hoses for leaks and correct if necessary.

FILTER OPERATION

A newly filled pool is normally filled with unfiltered water and usually requires continuous filtering for 24 to 48 hours along with chemical treatment of the pool water. Because all pool installations vary in environmental conditions (wind, rain, airborne debris, heat and pool use, etc.), it is impossible to provide an accurate filtering time for normal usage. Use a trial and error method to determine how long your filter must operate each day. Generally, 6 to 8 hours of filtering each day is sufficient to maintain pool clarity if the pool chemical treatment is correct.

When possible, avoid operating your filter during peak electricity demands in your community. Check with your local electric utility company for the best times they recommend for operating your filter pump.

WHEN TO BACKWASH

As your filter removes debris from the pool water during the filtering process, the return flow will gradually reduce. Backwash when the pressure gauge increases 5 to 7 pounds above the clean filter starting pressure. Normal backwash duration is 1-1/2 to 2 minutes or until water runs clear.

VACUUMING YOUR POOL

When vacuuming your pool, the filter must work harder. Consequently, all of that debris is caught in the filter at a very rapid rate. This causes a rapid increase in filter pressure as will be

indicated on the pressure gauge. Frequent backwashing will be necessary during this process depending on the amount of sediment being vacuumed off the pool floor. Keep a check on the pool water level and refill as required.

MAINTENANCE

Preventative maintenance will provide continued smooth performance and extend the life of your filter for many years. Neglect will cause parts to wear or bind, leaks to occur and result in costly repairs. Keep moving parts lubricated and a clean environment around your filter and related components.

LUBRICATION

There are various types of lubricants available. However, most are intended for moving metal parts. Unfortunately, these lubricants will harm or degrade plastics. **DO NOT** use petroleum base lubricants. Many people consider "PETROLEUM JELLY" safe for babies, and can be applied to anything. But, it will **DESTROY** most plastics and o-ring seals. Silicone lubricants are available at your pool dealer, and are safe for use on plastics and o-rings.

LUBE VALVE SHAFT

To lubricate the o-ring on the valve shaft, depress valve handle fully and apply silicone lubricant on the shaft between handle and valve cover. Then, rotate handle to distribute lubricant. Resume normal filter operation by rotating handle to the Filter position and start pump.

REPAIRS

Servicing should be performed by a qualified dealer. If disassembly is attempted, mark each of the parts assembled position as it relates to its mating parts. This assures proper alignment when reassembled. Malfunction will occur if not properly assembled. See your dealer for original replacement parts.

CAUTION

BEFORE removing filter or pump from pool for servicing, prevent the backflow of water from your skimmer and return inlet from flowing out of disconnected hoses.

1. Remove skimmer cover and basket and plug inside bottom hole with rag.
2. Referring to the instructions for your return inlet, remove the inlet cover and eye ball. Insert the winterizing disc and reinstall the cover.
3. Disconnect hoses on filter or pump as necessary when removing for service or repairs.

DRAIN TANK
See Caution Above

1. Turn clamp screws counter-clockwise to loosen clamp. Remove clamp, valve and o-ring.
2. Remove tank drain cap to drain.
3. Place plastic bag over riser tube in tank and secure with a rubber band. Scoop out sand with a medium size can and place in plastic bag.
4. After servicing, reassemble and install in reverse. Make sure tank o-ring and sealing areas are free of any sand grains.

WINTERIZING FILTER

In areas subject to freezing damage, it is mandatory that the filter, pump and any related components be removed from the pool and stored indoors. (Refer to individual components owners guide such as pump, skimmer, chlorinator, etc., for specific winterizing instructions.)

1. Backwash the filter.
2. Syphon pool water level down below skimmer opening by using your vacuum hose and allow water to flow to an area that can accept a couple of thousand gallons or more.
3. Turn clamp screws counter-clockwise to loosen clamp. Remove clamp, valve and o-ring.
4. Remove tank drain cap and allow tank to drain fully.
5. Disconnect all hoses.
6. Place plastic bag over riser tube in tank and secure with a rubber band. Scoop sand out with a medium size can and place in plastic bag. If sand is not badly contaminated, save for next season.
7. Store all components in a warm dry area indoors.

DAMAGE CAUSED BY FREEZING TEMPERATURES IS NOT COVERED BY PRODUCT WARRANTY.

Exploded View Spectra 3 Model 17"
Lomart Sand Filter with 6 Position Valve

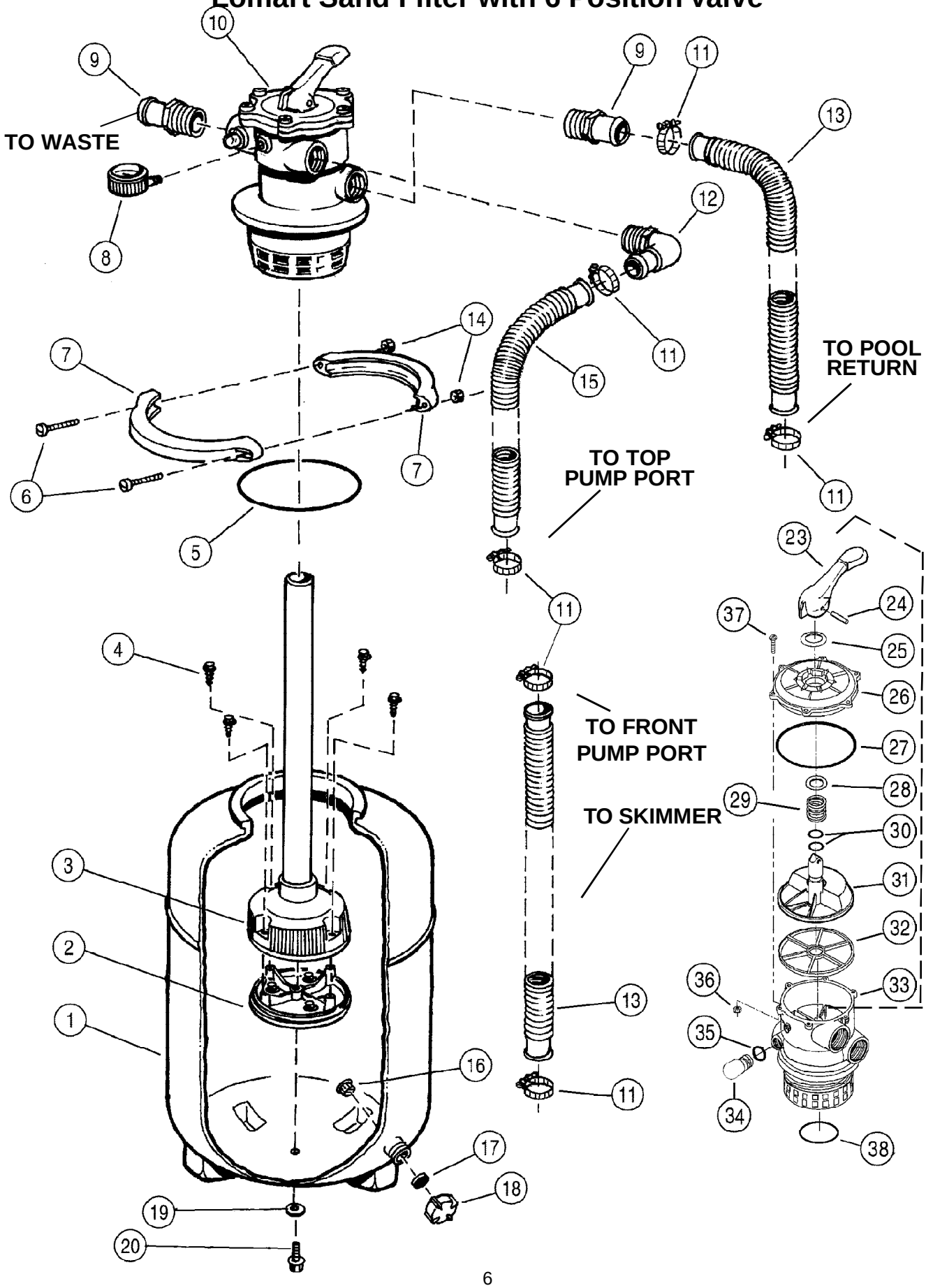

Parts List Spectra 3 Model 17"
Lomart Sand Filter with 6 Position Valve

ITEM	PART #	QTY	DESCRIPTION
*1	1121-1878	1	Tank w/Decals - 17" Model
2	1107-1636	1	Underdrain Base Assembly
**3	1121-1855	1	Underdrain Assembly - 17" Model
4	330-1023	4	#8 x 5/8" Screw
5	308-1265	1	Tank O-Ring Gasket
6	330-1260	2	1/4-20 x 1-1/2" Mach. Screw
7	340-2281	2	Tank Clamp
8	395-1014	1	2" Pressure Gauge
9	340-1951	2	1-1/2" Hose Adaptor
10	1121-1571	1	Valve Assembly
11	387-1017	6	1-1/2" Hose Clamp
12	340-1892	1	1-1/2" Elbow Hose Adaptor
13	346-1037-1	2	1-1/2" x 8' Hose
14	321-1082	2	1/4-20 Hex Nut
15	346-1019-1	1	1-1/2" x 48" Hose
16	340-2200	1	Drain Screen
17	307-1001	1	Drain Cap Gasket
18	340-2105	1	Drain Cap
19	308-1225	1	5/16" Thread Seal
20	330-1245	1	5/16-18 x 1-1/4" Bolt
21	368-1069	1	Warranty Card

* Item 1 includes items 16, 17, and 18.

**Item 3 includes items 2 and 4.

VALVE ASSEMBLY

ITEM	PART #	QTY	DESCRIPTION
23	1121-1622	1	Valve Handle
24	1121-1623	1	Handle Pin
25	1121-1624	1	Washer - Large
26	1121-1626	1	Cover
27	1121-1627	1	O-ring - #252
28	1121-1628	1	Washer - Small
29	1121-1629	1	Spring
30	1121-1630	2	O-ring Diverter
31	1121-1631	1	Diverter
32	1121-1632	1	Spider Gasket
33	1121-1633	1	Valve Body
34	1121-1636	1	Sight Glass
35	1121-1635	1	Sight Glass Gasket
36	1121-1634	6	Nut
37	1121-1625	6	Screw - M6 x 30mm
38	1121-1701	1	O-ring - #225
39	360-1764	1	Valve Decal (not shown)

Exploded View Spectra 3 Model 20" and Model 24"
Lomart Sand Filter with 6 Position Valve

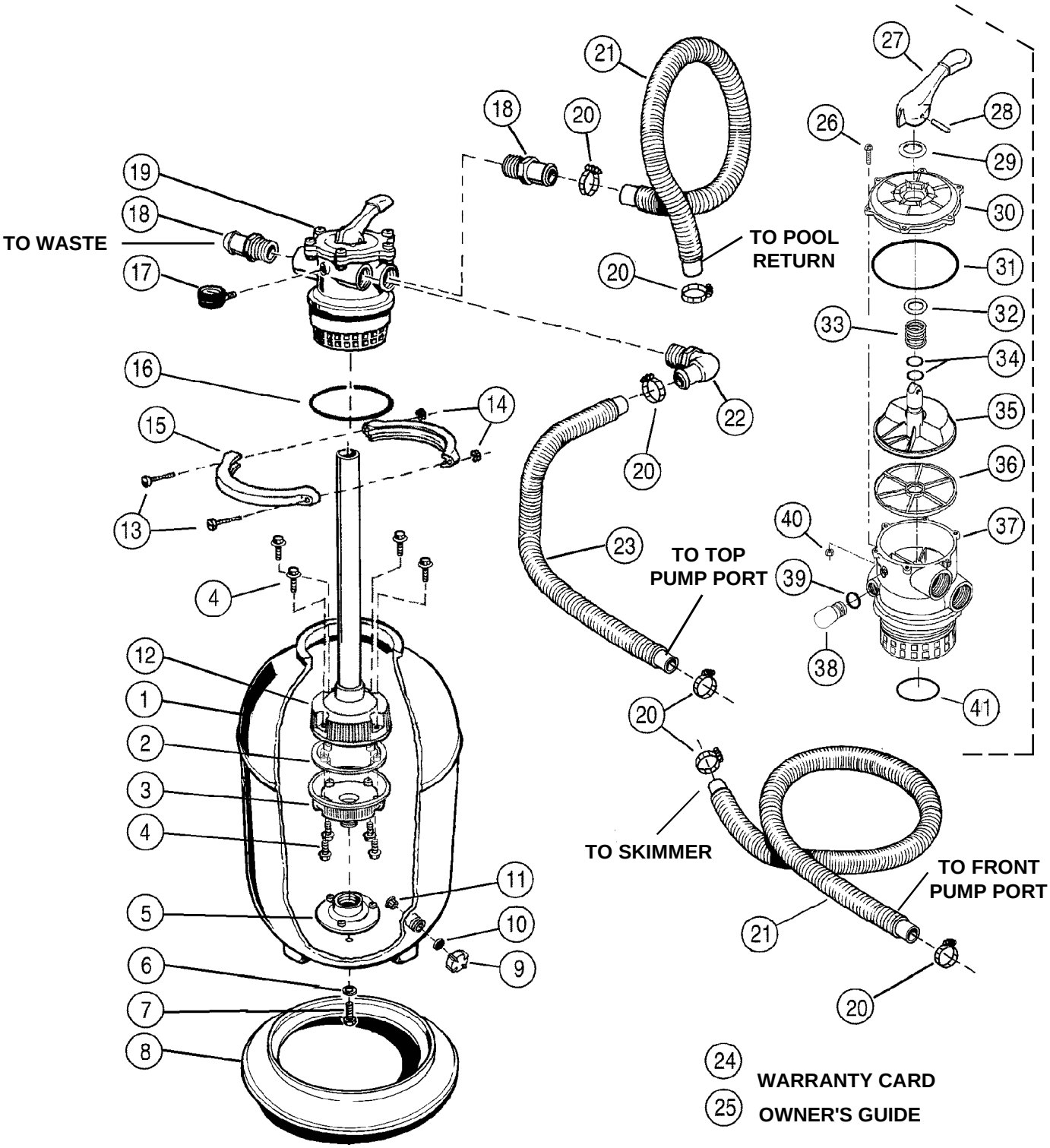

Parts List Spectra 3 Model 20" and Model 24"
Lomart Sand Filter with 6 Position Valve

ITEM	PART #	QTY	DESCRIPTION
*1	1121-1879	1	Tank w/Decals Model - 20"
	1121-1880	1	Tank w/Decals Model - 24"
2	340-2224	1	Underdrain Spacer
3	1107-1649	1	Threaded Underdrain Assembly
4	330-1023	8	#8 x 5/8" Screw
5	1121-1543	1	Tank Internal Adaptor w/Insert & Screws
6	308-1225	1	5/16" Thread Seal
7	330-1245	1	5/16-18 x 1-1/4" Bolt
8	340-2149	1	Filter Base
9	340-2105	1	Drain Cap
10	307-1001	1	Drain Cap Gasket
11	340-2200	1	Sand Filter Drain Screen
**12	1107-2426	1	Underdrain Assembly Model - 20"
	1121-1858	1	Underdrain Assembly Model - 24"
13	330-1260	2	1/4-20 x 1-1/2" Mach. Screw
14	321-1082	2	1/4-20 Hex Nut
15	340-2281	2	Tank Clamp
16	308-1265	1	Tank O-Ring Gasket
17	395-1014	1	2" Pressure Gauge
18	340-1951	2	1-1/2" Hose Adaptor
19	1121-1571	1	Valve Assembly w/Decal
20	387-1017	6	1-1/2" Hose Clamp
21	346-1037-1	2	1-1/2" x 8' Hose
22	340-1892	1	1-1/2" Hose Elbow
23	346-1019-1	1	1-1/2" x 48" Hose
24	368-1069	1	Warranty Card
25	365-1945	1	Owner's Guide

* Includes items 9, 10, and 11.

**Item12 includes items 2, 3 and 4

VALVE ASSEMBLY

ITEM	PART #	QTY	DESCRIPTION
26	1121-1625	6	Screw - M6 x 30mm
27	1121-1622	1	Valve Handle
28	1121-1623	1	Handle Pin
29	1121-1624	1	Washer - Large
30	1121-1626	1	Cover
31	1121-1627	1	O-ring - #252
32	1121-1628	1	Washer - Small
33	1121-1629	1	Spring
34	1121-1630	2	O-ring Diverter
35	1121-1631	1	Diverter
36	1121-1632	1	Spider Gasket
37	1121-1633	1	Valve Body
38	1121-1636	1	Sight Glass
39	1121-1635	1	Sight Glass Gasket
40	1121-1634	6	Nut - M6
41	1121-1701	1	O-ring - #225
42	360-1764	1	Valve Decal (not shown)

TROUBLESHOOTING SAND FILTERS

PROBLEMS	POSSIBLE CAUSE	REMEDIES
1 - High gauge pressure, low return flow	1 - Insufficient backwashing. 2 - Excessive contaminants or algae in sand. 3 - Filter sand is too fine. 4 - Underdrain plugged.	1 - Backwash filter. 2 - Backwash filter 3 - Use #20 filter sand. 4 - Replace sand.
2 - Low gauge pressure, low flow. Pump sucking in air. Pump sounds like marbles rattling in it.	1 - Water level too low in pool. 2 - Restriction on suction side of pump. 3 - Skimmer or strainer basket filled with debris.	1 - Fill pool so water is between marks on skimmer face plate. 2 - Clear obstruction in skimmer, hoses or pump. 3 - Clean skimmer and strainer baskets.
3 - High flow, low or normal gauge pressure but pool water will not clear up.	1 - Pool water is chemically out of balance. 2 - Sand too coarse. 3 - Sand grains rounded or worn.	1 - Check with test kit or contact dealer. 2 - Use #20 filter sand. 3 - Use crushed #20 filter sand.
4 - Short filter cycles.	1 - Excessive contaminants or algae in sand or pool. 2 - Improper backwashing. 3 - Sand too fine.	1 - Check chemical balance. Filter will require frequent backwashing. 2 - Backwash filter thoroughly. Waste hose too long or restricted. 3 - Replace sand with #20 filter sand.
5 - Sand entering pool.	1 - Defective underdrain. 2 - Sand too fine.	1 - Replace underdrain. 2 - Use #20 filter sand.
6 - Water leaking to waste.	1 - Valve not seated in filter position. 2 - Defective gasket in valve body.	1 - Actuate valve handle and make sure valve is seated. 2 - Replace gasket or contact dealer. Note: Contact your pool dealer for any problems you cannot solve.

THIS PAGE INTENTIONALLY LEFT BLANK

WARNING

RESCUE ___-____

Change of Design: Lomart Industries expressly reserves the right to change or modify the design and construction of any product in due course of our manufacturing procedures, without incurring any obligation or liability to furnish or install such changes or modifications on products previously or subsequently sold.

The Single Source Supplier

Lomart

A Division of Hoffinger Industries, Inc.

Lomart Industries

315 N. Sebastian St. • West Helena, AR 72390

Visit our website at www.lomart.com

Copyright © 2004